M11296 | 1

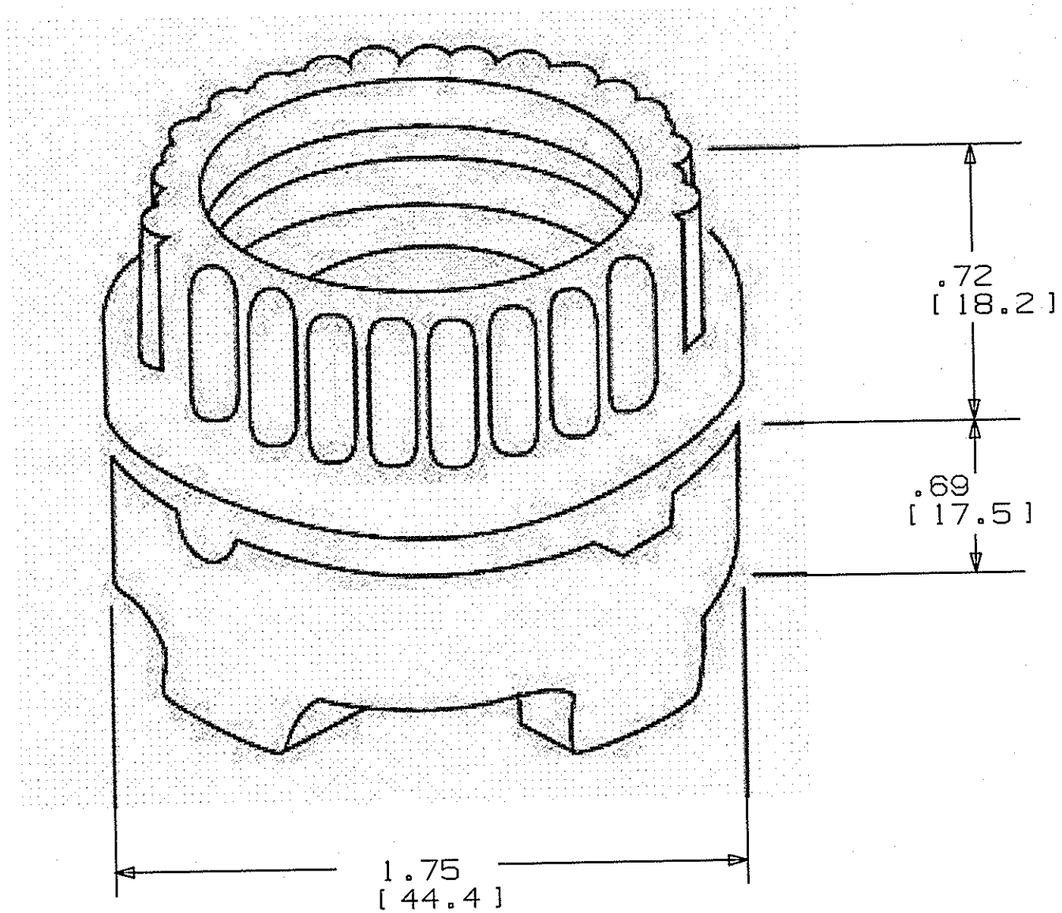

NOTES:

1. DIMENSIONS ARE INCHES [mm].
2. SCREW SHELL COMPLIES TO MEDIUM BASE LAMPHOLDER ANSI-C81.10 STD2-11-1 AND IEC E26.
3. MOUNTS INTO A 1 7/16 IN.[36.5mm] DIAMETER HOLE IN PANEL.
4. UL, cUL, CSA LISTED.
5. RATED 660W MAX., 250V MAX.
6. PACKAGING: PRODUCT PLACED IN BOX.

LIST OF PARTS

DESCRIPTION	MATERIAL	FINISH
BASE	PORCELAIN	WHITE
SCREW SHELL	ALUM	
CENTRE CONTACT	BRASS	

SYM	REVISIONS	APP	DATE
1	12/01/09 RELEASE TO PRODUCTION PER DCN 16198	CAC CAC	

THE DESIGN AND DIMENSIONS OF THE PRODUCT SHOWN ON THIS DRAWING ARE SUBJECT TO CHANGE WITHOUT NOTICE

TITLE INCANDESCENT SOCKET MED BASE 2PIECE SCREW TERM

TOLERANCES UNLESS OTHERWISE SPECIFIED
FRACTIONS ±1/64
DECIMALS ±.005
ANGLES ±2°

WIRING DEVICE-KELLEMS
HUBBELL INCORPORATED
BRIDGEPORT, CT

DR. BY DLI	APP. BY
TR. BY	SCALE NONE
CHK'D BY	DATE 04/01/09

DIMENSION SHEET FOR CAT. NO. RL164

REPAIRABLE ☐ NON-REPAIRABLE ☒

B

M11296

1

CODE 74545